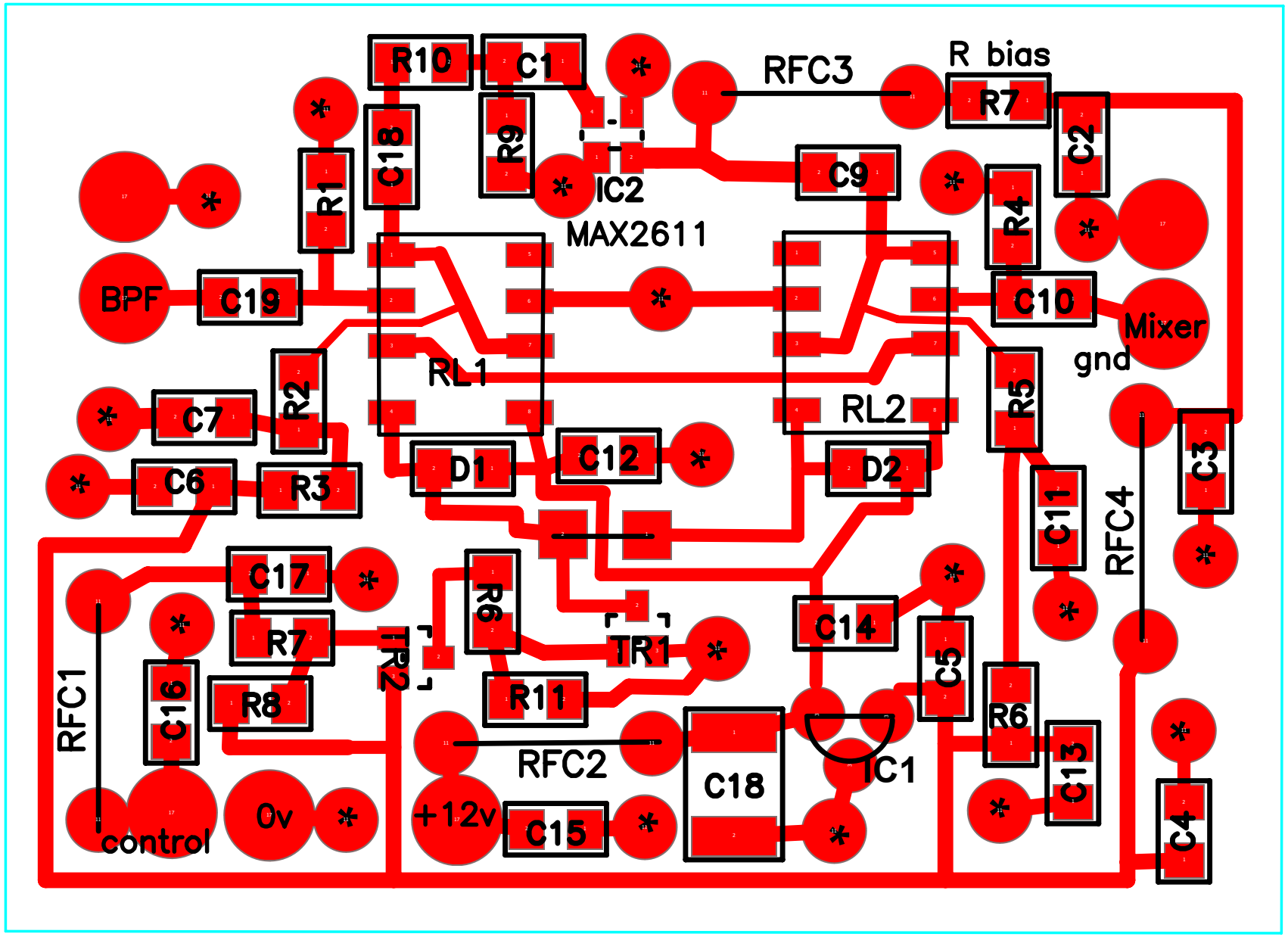
R10
C1
RFC3
R bias
R7
C2
R9
C18
R1
IC2
MAX2611
C9
R4
BPF
C19
C10
Mixer
gnd
RL1
RL2
R5
R2
C7
C6
R3
D1
C12
D2
C3
C11
RFC4
C17
R6
R7
TR2
TR1
C14
C5
C16
R8
R11
R6
RFC1
RFC2
C18
IC1
C13
C4
control
0v
+12v
C15