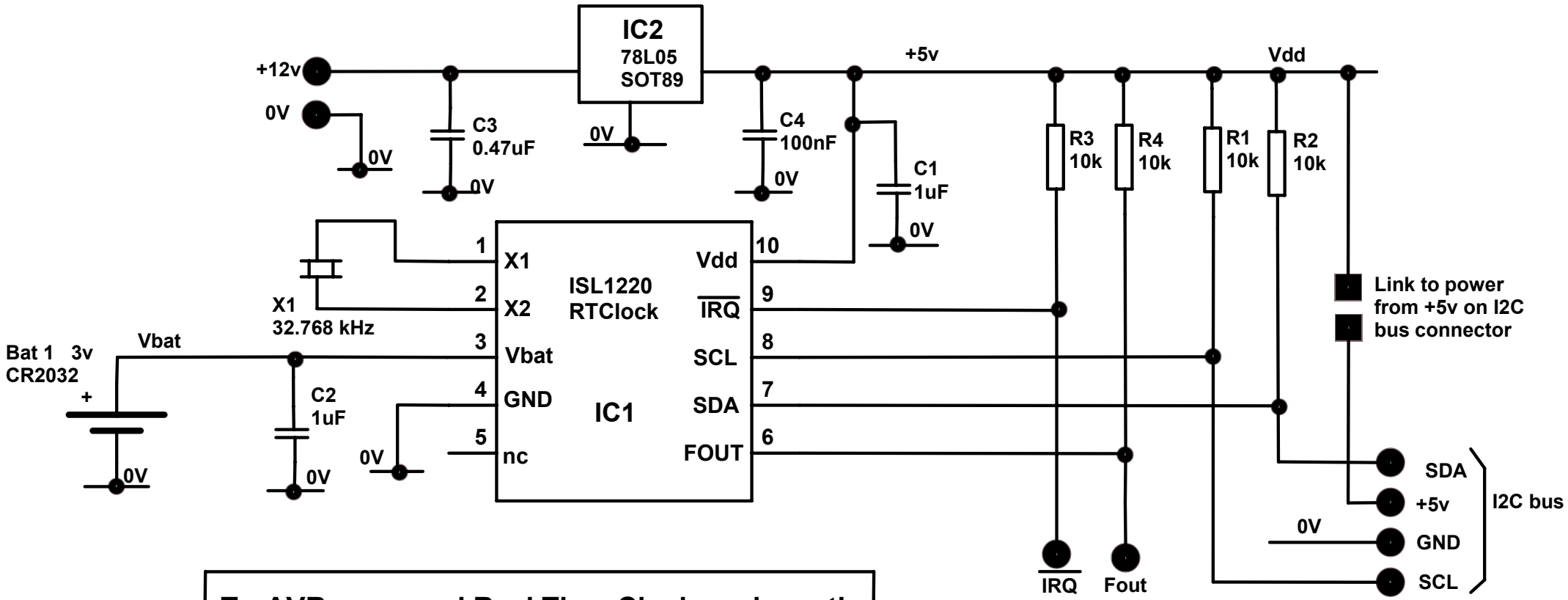

TrxAVR proposed Real Time Clock - schematic

Ian Sumner G3VPX
19.12.2010

Pad2pad.com